# County Silo
# Drive Under Range

SILO & GANTRY SYSTEM

A County Silo complete with the heavy duty steel support gantry allows quick easy discharge directly into your mixer wagon or trailer. Models are available to give optimum mass flow for meals, blends, straights and pelleted products.

Simply reverse or drive under the gantry, the slide can be operated either manually via a winch system or a hand operated pneumatic valve, the pneumatic option can also be easily opened using the optional remote control handset, you don't even need to get out of the tractor cab!

## Special Features

- Volumes from 25.6m³ to 54.3m³
- Galvanised or Plasteel™ (Plastic coated galvanised steel) construction
- Smooth internal walls
- Pressure relief valve
- AutoVent
- FloView™ SafetyClean panel
- External, lockable filler pipe
- Heavy duty top filler bend (5mm wall thickness)
- Independent exhaust pipe
- Level indicators
- Crane lifting points
- Galvanised support structure designed to Eurocode 1, Part 1-4
- The heavy duty gantry is hot dipped galvanised for long life
- Base Dimensions: (w)5.5m x (l)5.0m x (d)0.55m

**NOTE:** If a pneumatic slide is selected, the system requires an air supply



Silos
Conveyors
Feeders

After a long, long life Collinson Silos are 100% Recyclable

## Gantry Specification

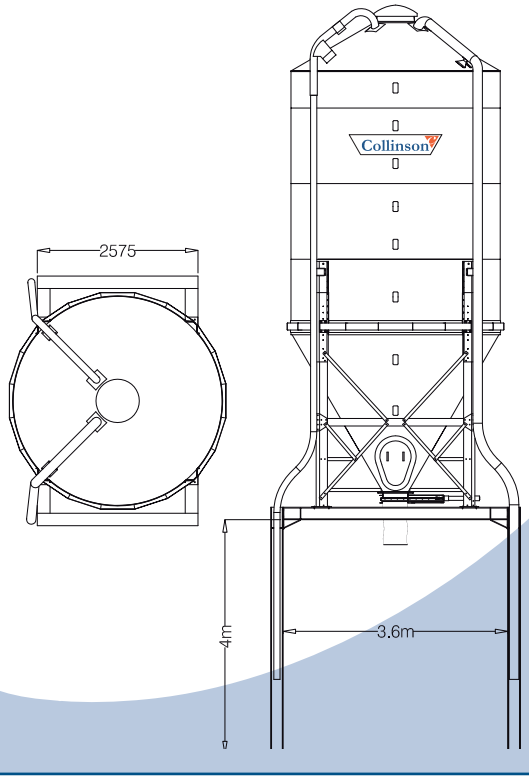


## Range of 6 Plasteel™ Finishes

| | | |
|---|---|---|
| Juniper Green BS 12B29 | Olive Green BS 12B27 | Moorland Green BS 12B21 |
| Merlin Grey BS 18B25 | Slate Blue BS 18B29 | Vandyke Brown BS 08B29 |

Colours may not be accurately reproduced in printing, colour samples available on request

## Getting the Silo Ready to Use

1) It is your responsibility as the customer to provide a suitable ready mix concrete with grade C30 base, dimensions as per recommendation.
2) The County Range Silos are delivered and erected by vehicles fitted with hydraulic tipping gear which erects the silo onto the concrete base.
3) The driver/fitter will drill the concrete base and bolt the silo into position using expansion type anchor bolts.
4) If fitted with a slide unit the silo is now ready to use alternatively if a conveyor discharge is being connected, fitting can now take place.

**Collinson plc**
Riverside Industrial Park, Tan Yard Road,
Catterall, Preston, Lancashire, PR3 0HP
T: 01995 606 451
collinson.co.uk

Silos
Conveyors
Feeders

Collinson